GENERAL SPECIFICATION OF MD950TW-CAN

UPDATE : 2019-04-12

Control System	CAN BUS			
	Protocol (Mode)	**Standard 2.0A**	**Extended 2.0B**	**UAVCAN**
	Baud-Rate	10kbps ~ 1 Mbps		
	Sample-Point	50% or 87.5%		
	Available SERVO ID	0 ~ 254		
	Available Node ID	0 ~ 65535	0~2147483647	1~127
	Input Signal Range	Input -12V~12V		
Position Sensor Type	Contactless encorder			
Operating Voltage Range	4.8 V ~ 7.4V			
Motor Type	DC (Coreless Metal Brush)			
Controller(MCU)	32Bits			
Travel	**Travel / Command**	90˚ / 4096		
	Servo Mode	**Left**	**Center**	**Right**
	Pos Command	+84	+8192	+16300
	Pos (Unit : ˚)	-178	0	+178
	Turn Mode	**Left**	**Power On**	**Right**
	Pos Command	-16300	0	+16300
	Pos (Unit : ˚)	-358	0	+358
	Turn Range	-32767 ~ +32767		

Voltage	**At 4.8V**	**At 6.0V**	**At 7.4V**
No Load Speed	0.23sec/60˚ (261˚/sec)(44RPM)	0.17sec/60˚ (353˚/sec)(59RPM)	0.14sec/60˚ (429˚/sec)(72RPM)
Stall Torque	21.0kg·cm (291.63oz.in)	29.0kg·cm (402.73oz.in)	35.0kg·cm (486.05oz.in)
Standing Current	30mA	30mA	30mA
No Load Running Current	300mA	390mA	500mA
Stall Current	3,700mA	4,800mA	6,200mA
Dead Band	4Step	4Step	4Step

Operating Temperature Range	-20˚C ~ +60˚C (-4˚F ~ +140˚F)
Vibrations at No Load	MIL-STD-810G 514.6C-VII
Storage Temperature Range	-30˚C ~ +80˚C (-31˚F ~ +176˚F)
Connector Wire Length	300mm(11.81in)
Outline Dimensions	40.0 x 20.0 x 38.0mm(1.57 x 0.79 x 1.50 in)
Weight	68.0g (2.4oz)
Ball Bearing	Dual Ball Bearing / MR106
Case Material	Engineering Plastic & Hardened Metal
Gear Material	1 Metal + Plastic & 3 Titannium Alloy
Gear Train Backlash	Max 0.5˚
Horn Gear Spline	H25T (25 Segment Ø6.0)
Splined Horns	IM25
Dust & Water Protect Class	-

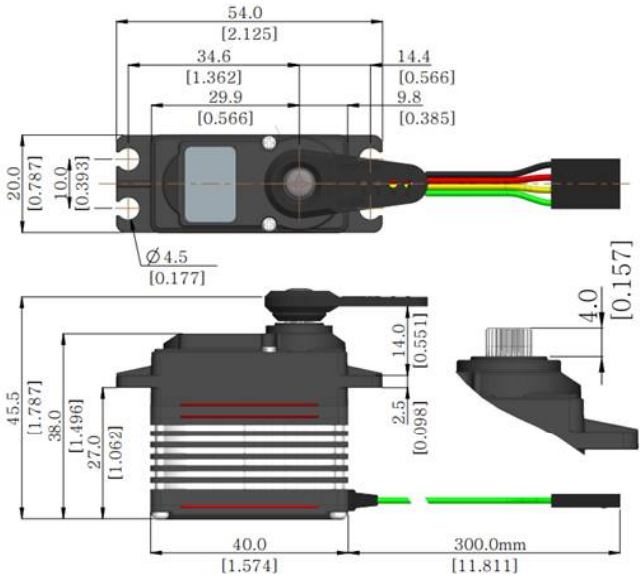

UNIT : mm(Inch)